Z : \PRODUCT \M \MF105 \ODD0002 .SCH

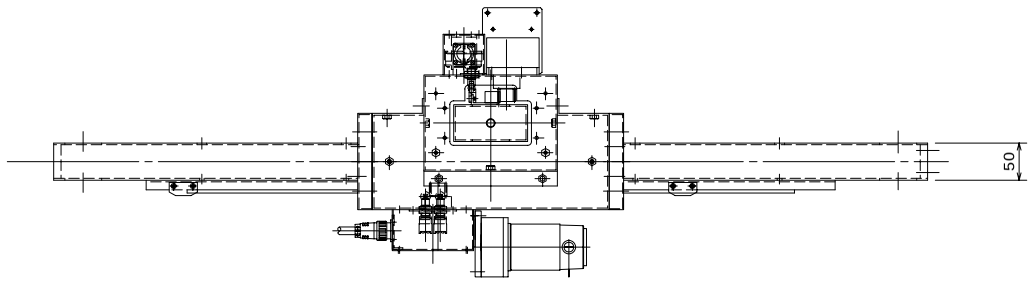

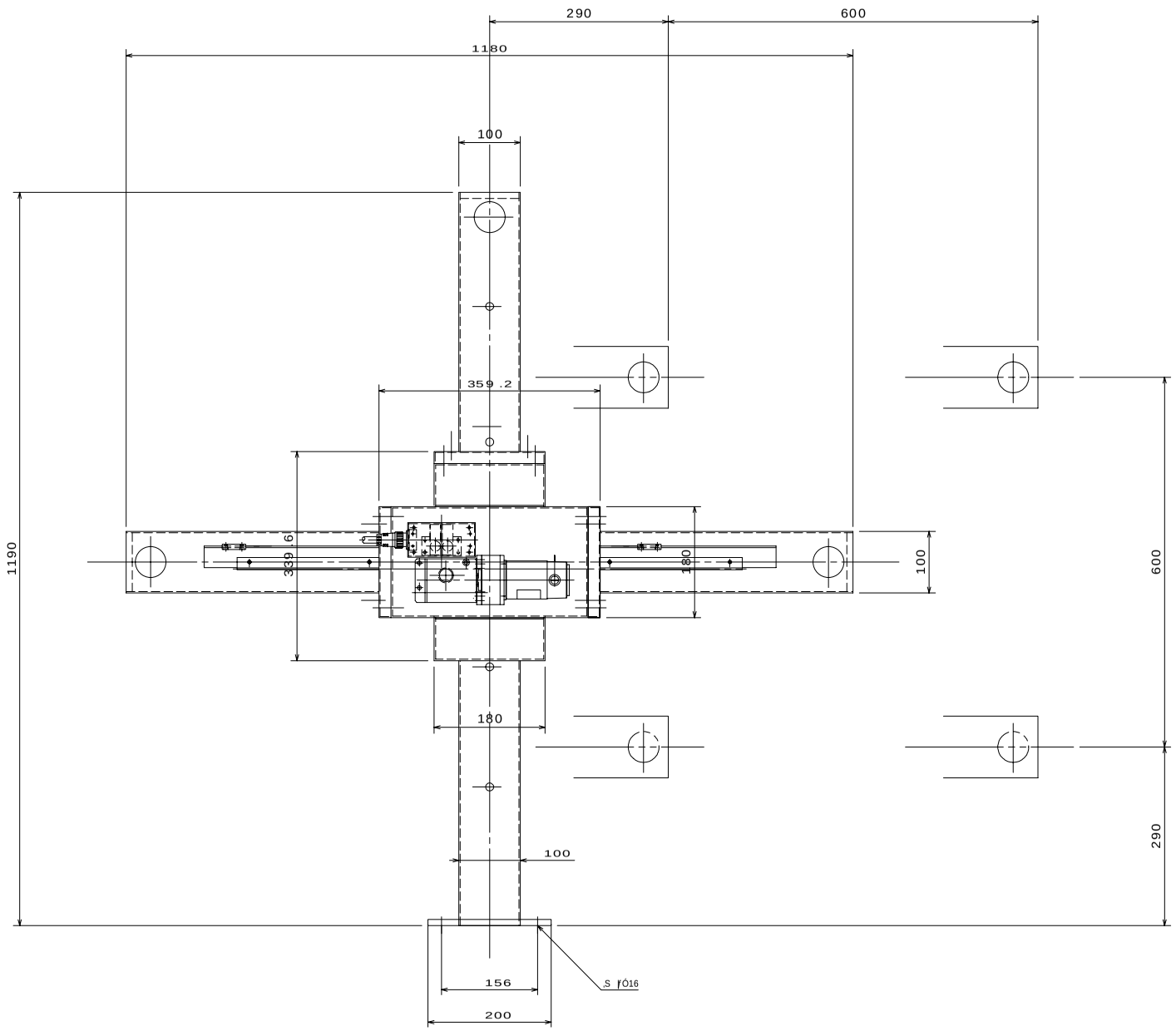

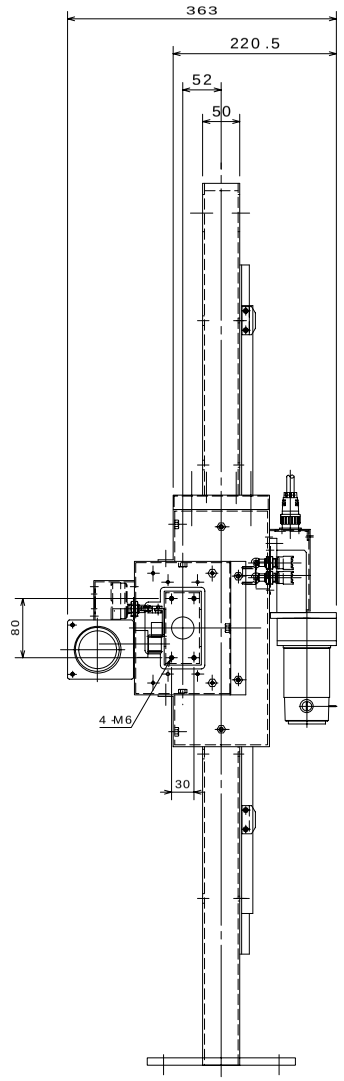

MF105	AUTO MANIPULATER TYPE MF		
2002 .12 .04	OUTLOOK		
	KILONY INDUSTRY CO .,LTD .		