Z : \PRODUCT \M \MF1212 \ODD0002 .SCH

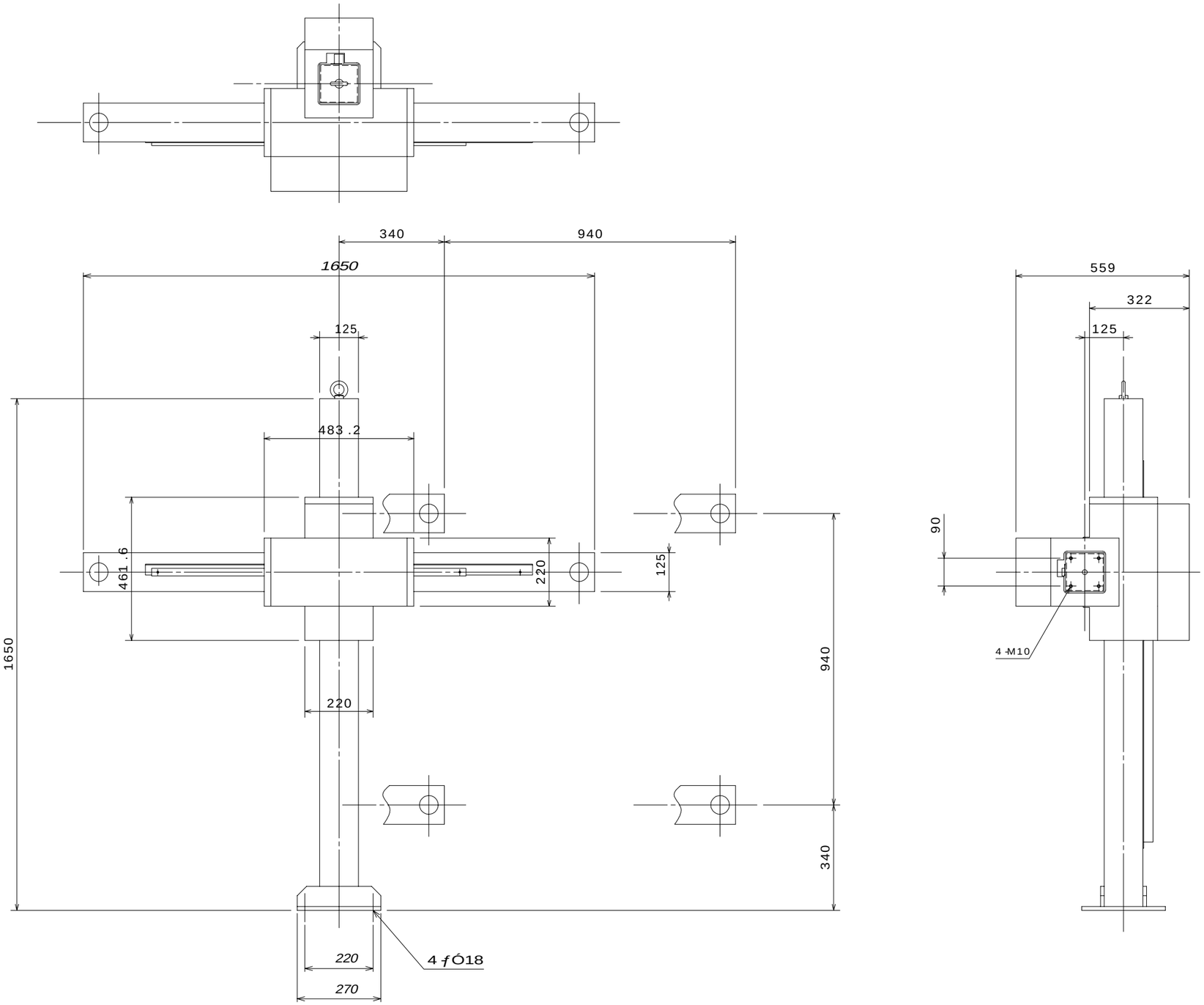

MF1212	AUTO MAN IPULATER TYPE MF
2002 .12 .04	OUTLOOK
	K ILONY INDUSTRY CO . ,LTD .